ITEM NO.	PART NUMBER
1	Bed Plate
2	Side Rail
3	Drive Pulley
4	Bearing Adapter
5	Idler Pulley
6	Idler Bearing
7	Drive Bearing
8	Tension Washer
9	Adjustment Cam
10	Siderail Screw
11	Bearing Adapter Screw
12	Belt
13	Side Rail
14	Set Screw
15	Stand-Off
16	Drive Pulley Shafting

LP Conveyor Modules

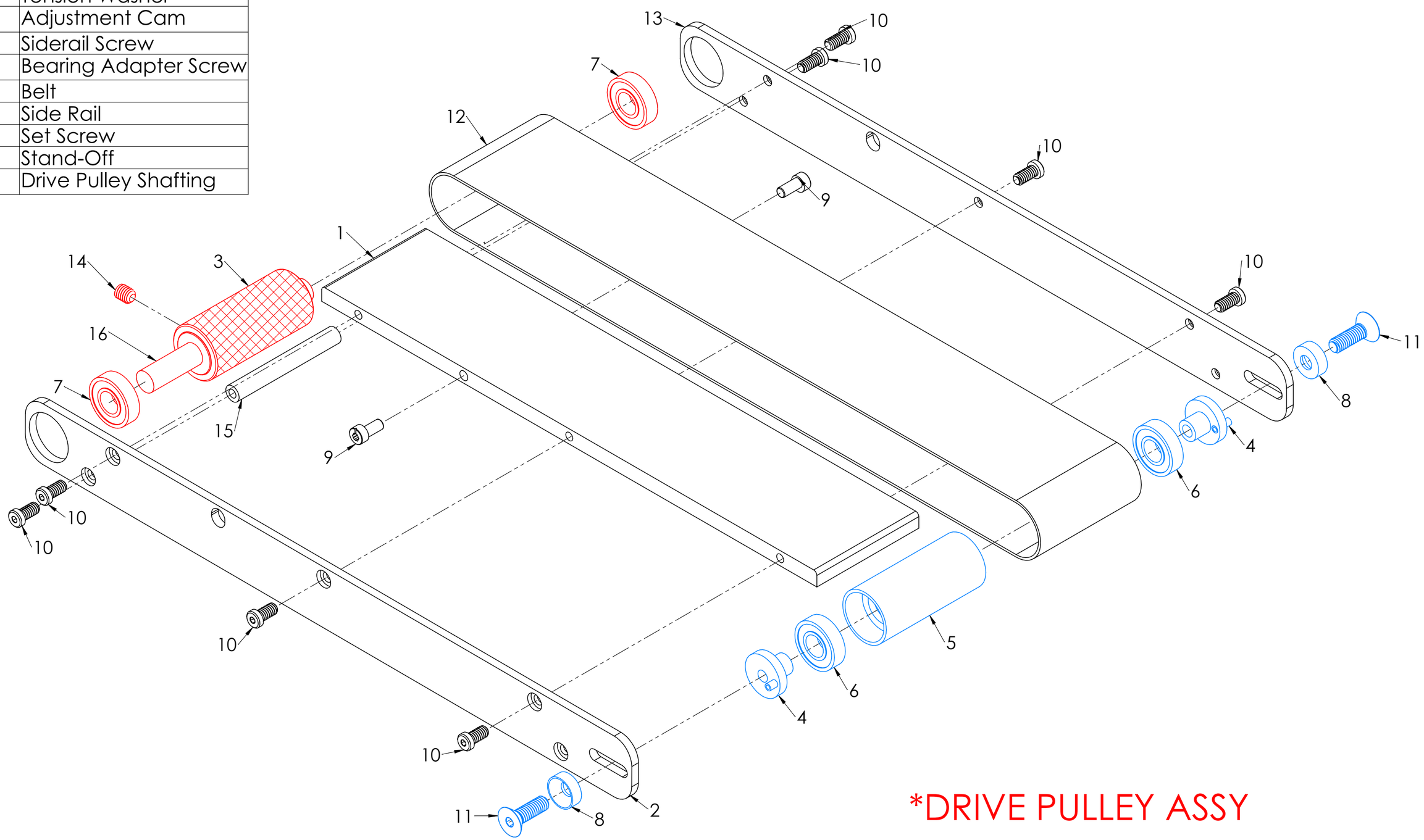

*DRIVE PULLEY ASSY

*IDLER PULLEY ASSY